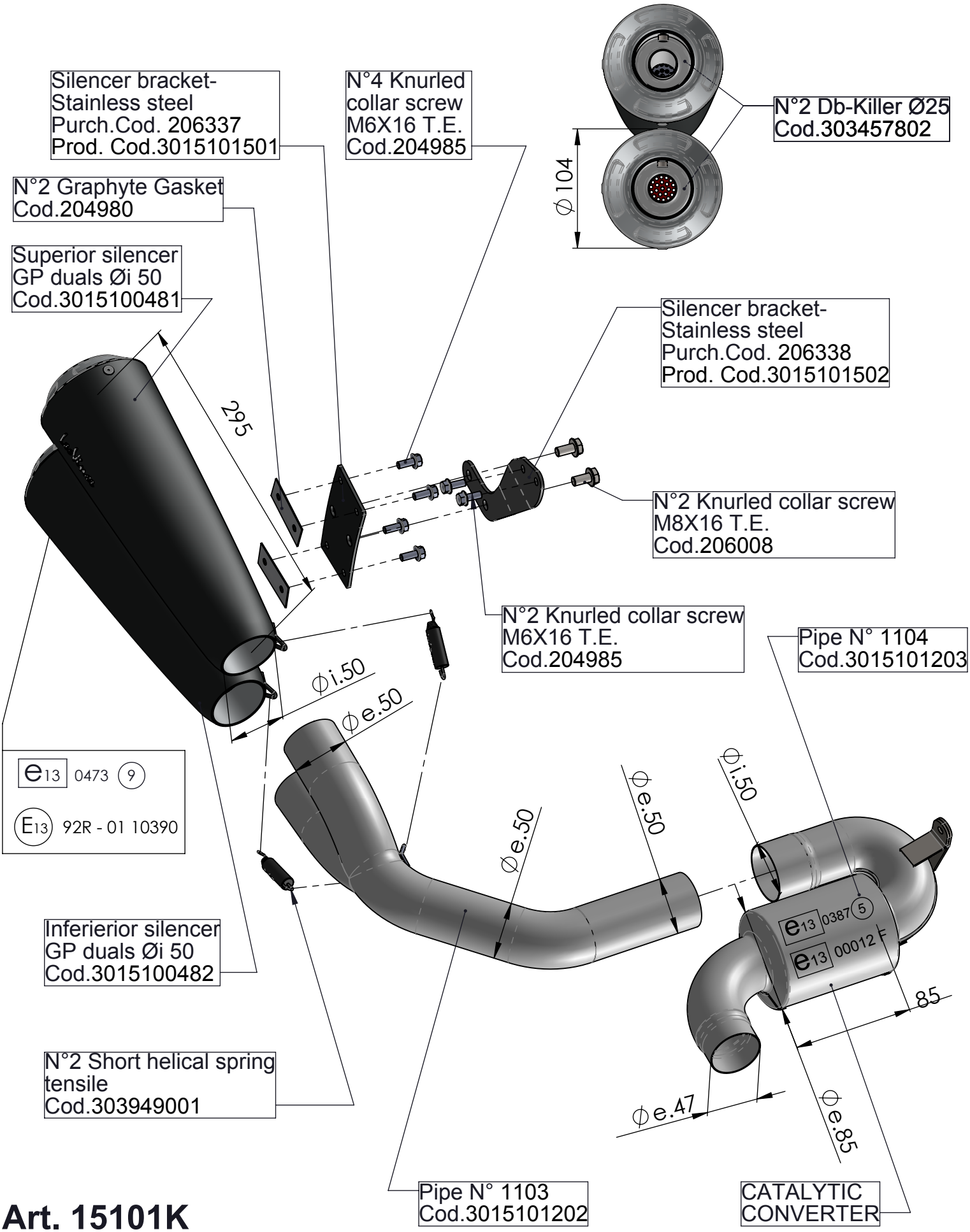

Art. 15101K

DUCATI SCRAMBLER 800

Slip-on "GP DUALS" - APPROVED -