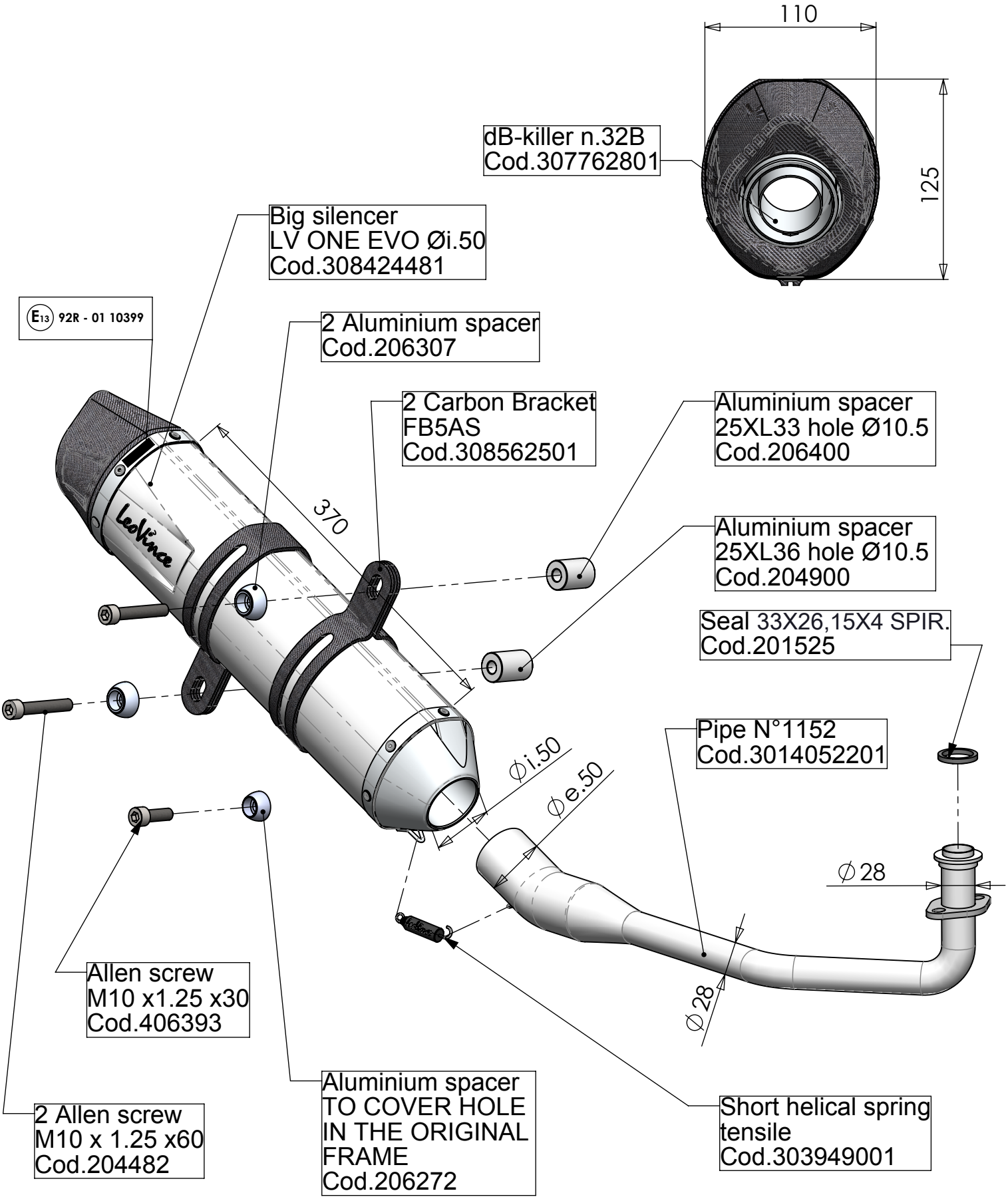

ART. 14215E

HONDA FORZA 125 / NSS125 / ABS

Full System 1/1 LeoVince "LV ONE EVO" STAINLESS STEEL - BIG -