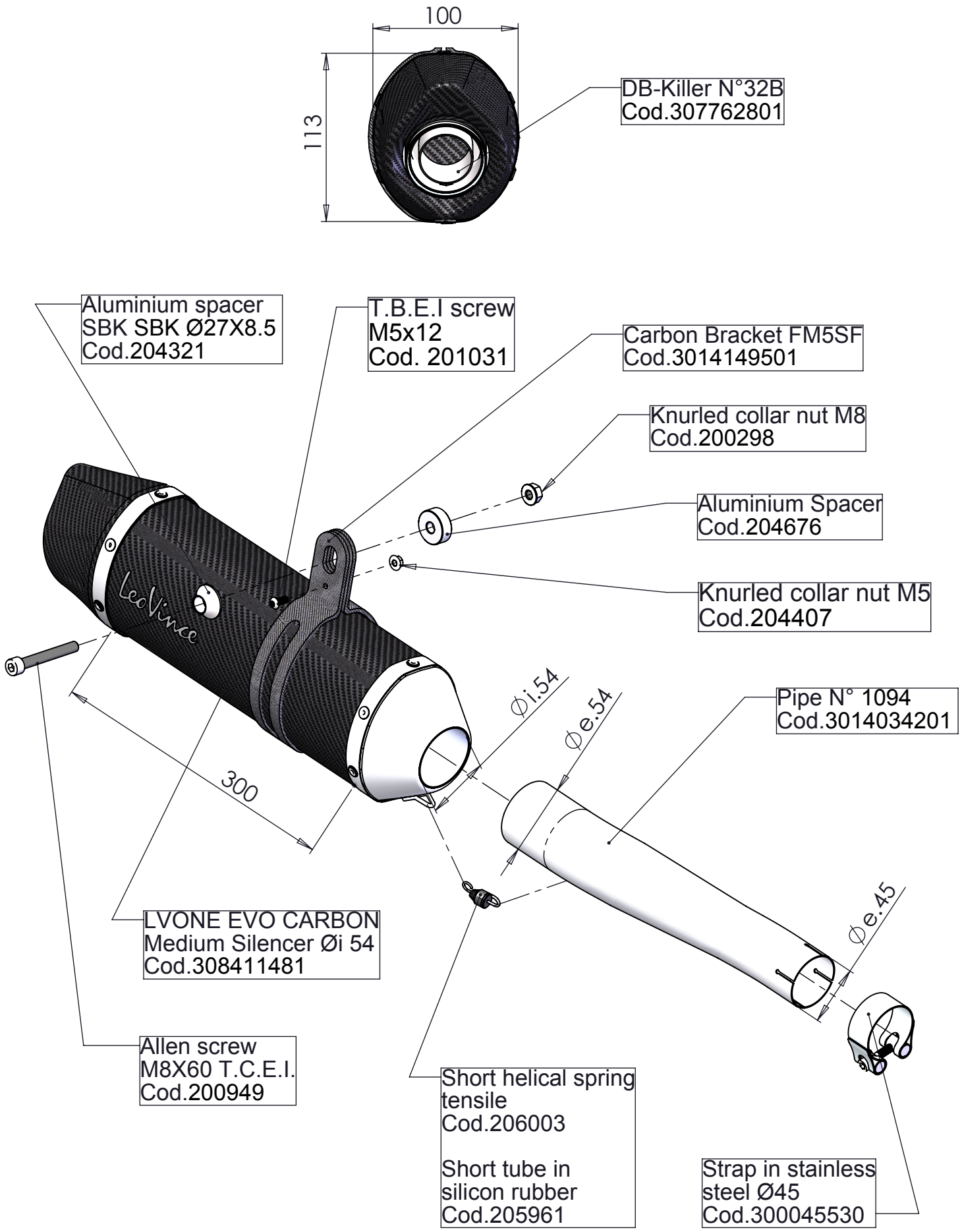

Art. 14161E

HONDA CB 400/500 F - CBR 400/ 500 R

Slip-on - LV ONE EVO - CARBON - APPROVED