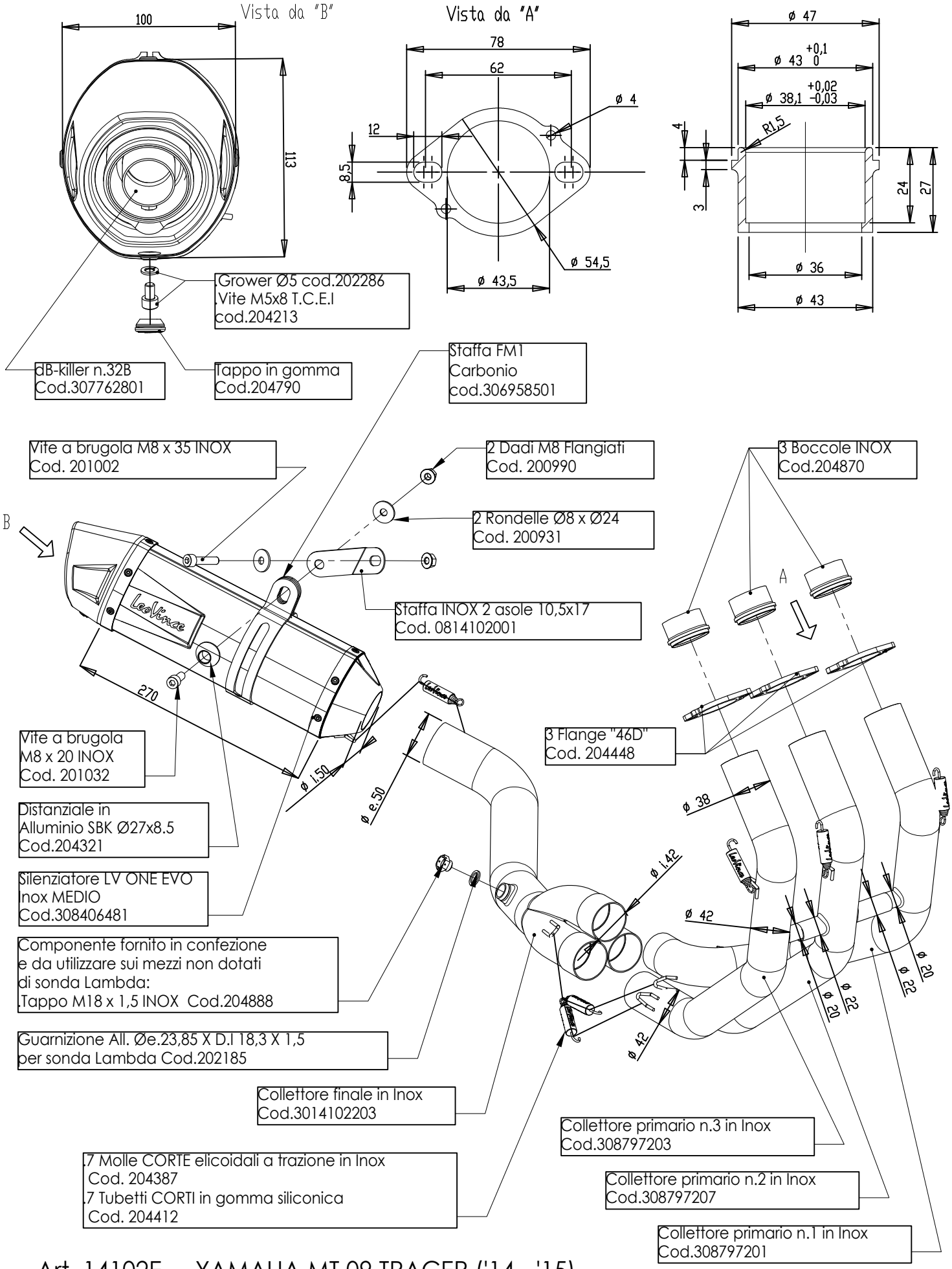

Art. 14102E YAMAHA MT 09 TRACER ('14 - '15)

Impianto completo 3/1 LV ONE-EVO-INOX
OMOLOGATO "EVOLUTION II"