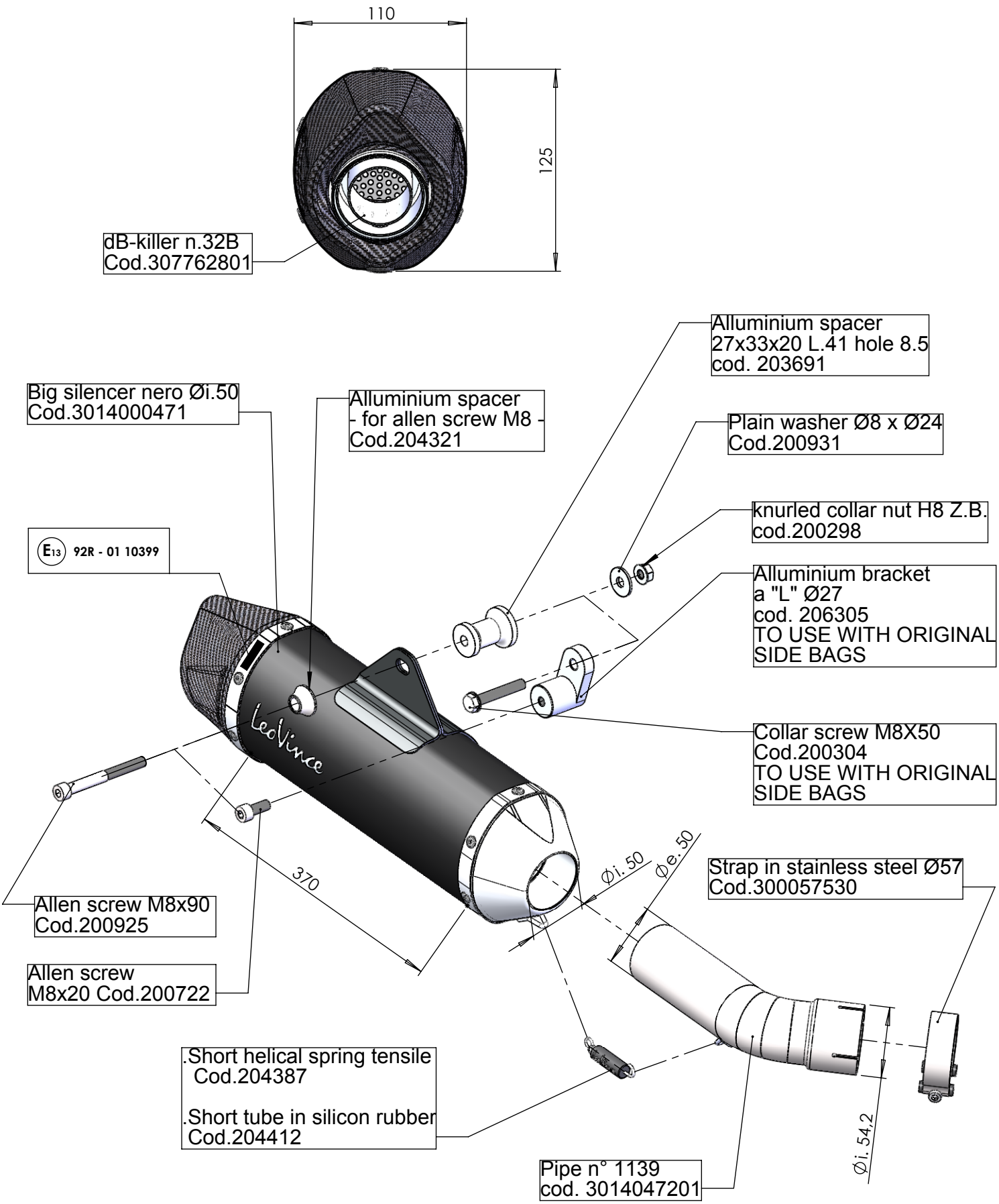

ART. 14047

SUZUKI V-STROM 1000

Slip-on LeoVince "NERO" BIG - APPROVED